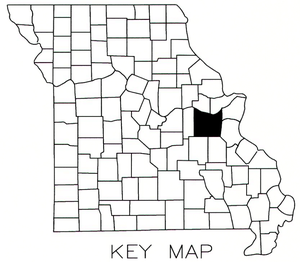

KEY MAP
SHOWING LOCATION OF FRANKLIN COUNTY

EAST AVENUE SANITARY SEWER REPLACEMENT

SULLIVAN TERRACE SUBDIVISION

CITY COUNCIL

Dennis Watz, Mayor
Tony Wessler, Ward I Alderman
Mark Dalton, Ward I Alderman
T.J. Carey, Ward II Alderman
Jason Alexander, Ward II Alderman
Paul McCulloch, Ward III Alderman
Bobby Maupin, Ward III Alderman

CITY ADMINISTRATOR

J.T. Hardy

DIRECTORY

CITY ENGINEERING DEPARTMENT Robert Schaffer, P.E., City Engineer	(573) 468–8965
CITY BUILDING DEPARTMENT Dan King, Code Administrator	(573) 468–8965
CITY STREET DEPARTMENT Billy Parker, Street Commissioner	(573) 468–4912
CITY WATER & SEWER DEPARTMENT John Garner, Water & Sewer Commissioner	(573) 468–4812
CITY ELECTRIC DEPARTMENT Joe Thurmond, Electric Commissioner	(573) 468–4712
CITY PARKS & RECREATION DEPARTMENT David Wall, Parks Director	(573) 468–5216
MISSOURI NATURAL GAS CO.	(800) 675–6577
MOGAS PIPELINE, LLC	(800) 282–4916
CHARTER CABLE TELEVISION	(636) 239–2197
FIDELITY TELEPHONE CO.	(573) 468–8081

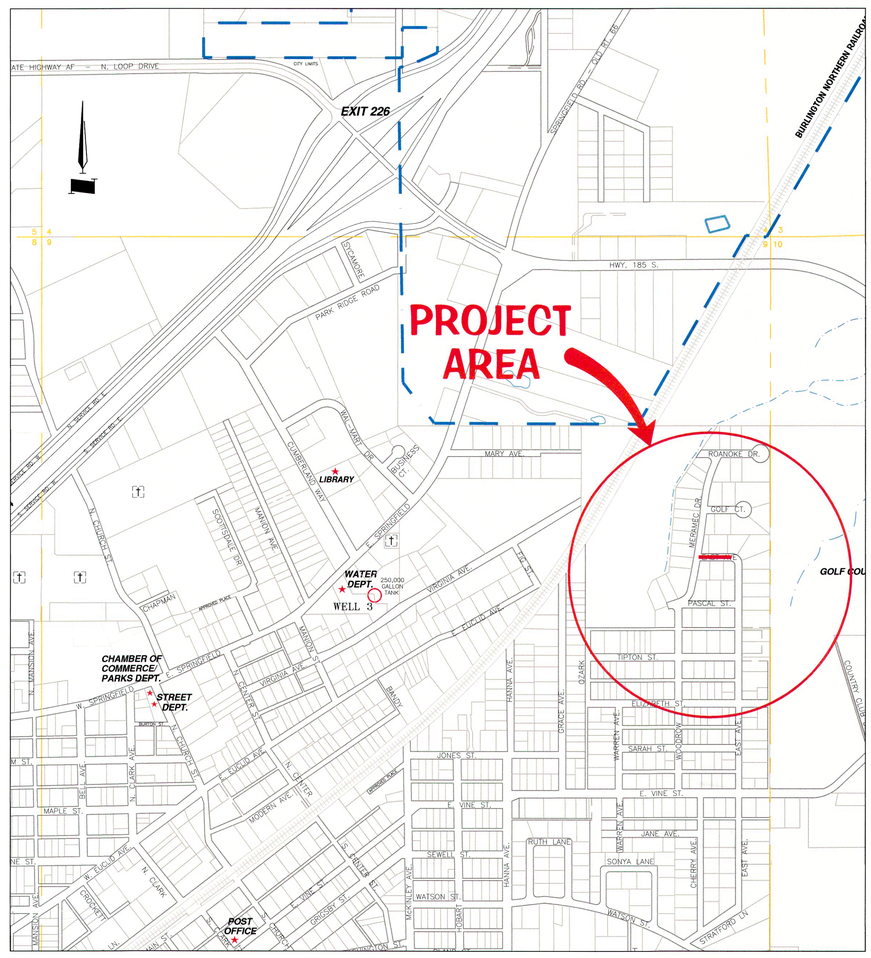

PROJECT LOCATION MAP

CALL 3 WORKING DAYS BEFORE you DIG
TOLL FREE
1–800–DIG–RITE OR 811
(344–7483)
MISSOURI ONE CALL SYSTEM, INC.

ABBREVIATIONS

ASPH.	ASPHALT
CL or ℄	CENTER LINE
CLR	CLEAR
CONC.	CONCRETE
DIP	DUCTILE IRON PIPE
ELEV. or EL.	ELEVATION
EX.	EXISTING
FL	FLOWLINE
FT	FEET
HORIZ.	HORIZONTAL
I.D.	INSIDE DIAMETER
LF	LINEAL FEET
LH	LAMPHOLE
LR	LONG RADIUS
MAX.	MAXIMUM
MH	MANHOLE
MIN.	MINIMUM
MJ	MECHANICAL JOINT
NO.	NUMBER
N.T.S.	NOT TO SCALE
O.C.	ON CENTER
PL	PROPERTY LINE
PVMT.	PAVEMENT
R or RAD.	RADIUS
REINF.	REINFORCING
SAN.	SANITARY
SHT	SHEET
STRUC.	STRUCTURE
T.B.R.	TO BE REMOVED
TYP.	TYPICAL
U.I.P.	USE IN PLACE
VERT.	VERTICAL
W/	WITH

City of Sullivan
Franklin County, MO.
East Avenue

DESIGN DESIGNATION

FUCTIONAL CLASSIFICATION = NA
A.D.T. 2019 = NA
DESIGN SPEED = NA
% TRUCKS = NA

LENGTH OF PROJECT

NET LENGTH OF PROJECT = 261.87 L.F.

SHEET INDEX

DESCRIPTION	SHEET NO.
TITLE SHEET	1
PLAN & PROFILE	2
DETAILS	3

REVISIONS	BY

STATE OF MISSOURI
ROBERT J. SCHAFFER
NUMBER E-29444
2/13/19
REGISTERED PROFESSIONAL ENGINEER

PROJECT FOR:
EAST AVE. SANITARY SEWER REPLACEMENT
SULLIVAN, MISSOURI

TITLE SHEET

210 W. WASHINGTON
SULLIVAN, MO 63080
PH. 573-468-8965
FAX. 573-468-8964
www.sullivanmo.us
sullivanmissouri
@CityofSullivan

DRAWN BY:	DG
CHECKED BY:	RS
DATE:	FEB. 11, 2019
SCALE:	NTS
PROJECT No.	19005
FILE:	19005T1
SHEET	1 OF 3 SHEETS

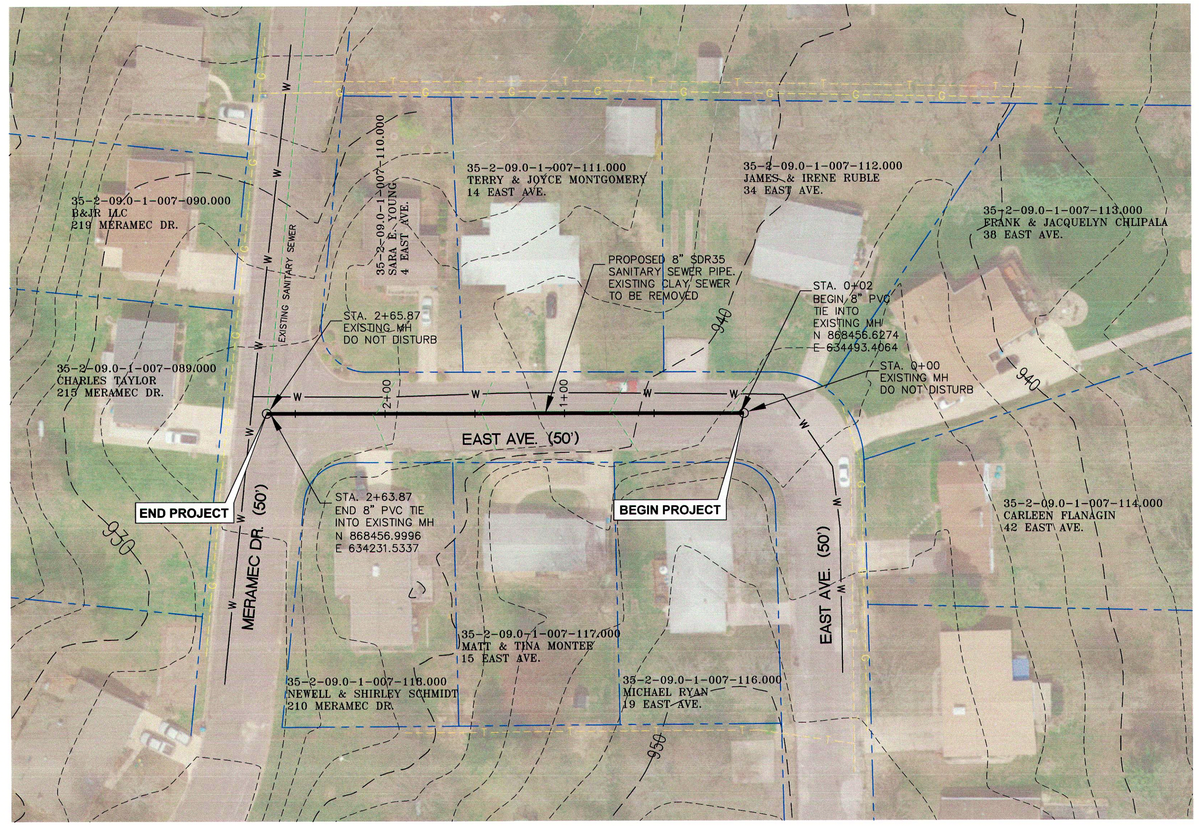

40 0 20 40 80 160

(IN FEET)
1 inch = 40 ft.

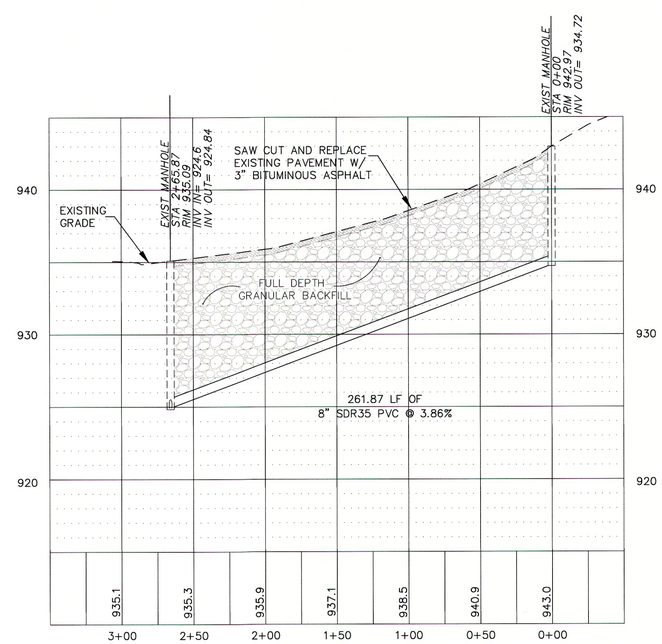

PROFILE SCALE:
1"=50' HORIZ.
1"=5' VERT.

CALL OR CLICK BEFORE YOU DIG
1-800-DIG-RITE or 811
1-800-344-7483
MISSOURI ONE CALL SYSTEM
mo1call.com

REVISIONS	BY

STATE OF MISSOURI
ROBERT SCHAFFER
NUMBER E-29444
REGISTERED PROFESSIONAL ENGINEER
2/11/19

PROJECT FOR:
EAST AVENUE SANITARY SEWER REPLACEMENT
SULLIVAN, MISSOURI

PLAN and PROFILE

SULLIVAN MISSOURI
" Values and Tradition - Vision and Progress "
210 W. WASHINGTON
SULLIVAN, MO. 63080
PH. 573-468-8965
FAX 573-468-6964
www.sullivan-mo.us
sullivanmissouri
@CityofSullivan

DRAWN BY:	DG
CHECKED BY:	RS
DATE:	FEB. 11, 2019
SCALE:	AS SHOWN
PROJECT No.	19005
FILE:	19005base
SHEET	2 OF 3 SHEETS

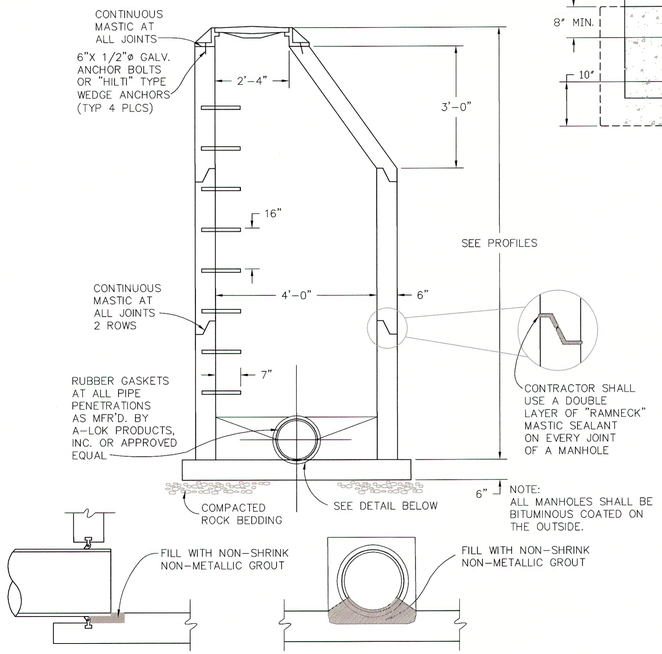

TYPICAL MANHOLE

NOTE: W = TRENCH WIDTH
W = O.D. + 2E
E = 9" (6" to 24" PIPE)
E = 12" (27" to 36" PIPE)
E = 15" (42" to 72" PIPE)

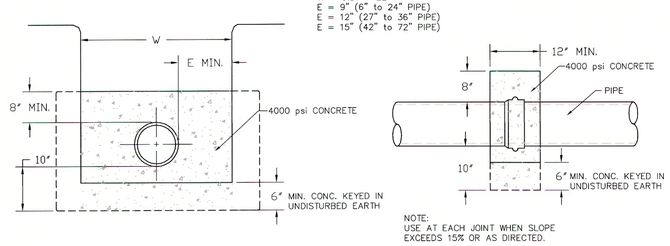

NOTE:
USE AT EACH JOINT WHEN SLOPE EXCEEDS 15% OR AS DIRECTED.

CONCRETE SLOPE ANCHORS

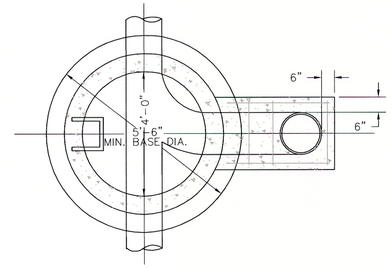

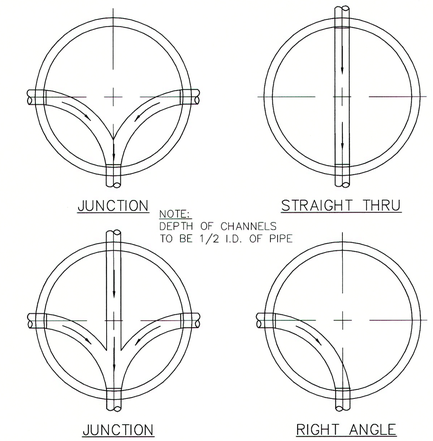

NOTE:
DEPTH OF CHANNELS TO BE 1/2 I.D. OF PIPE

MANHOLE BOTTOM DETAILS

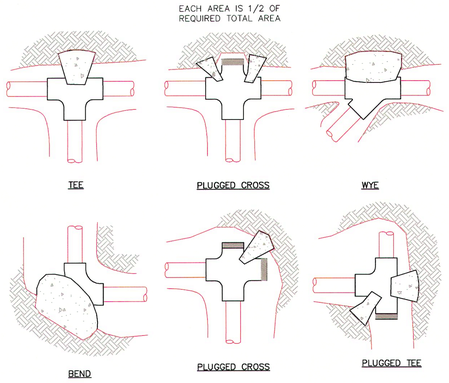

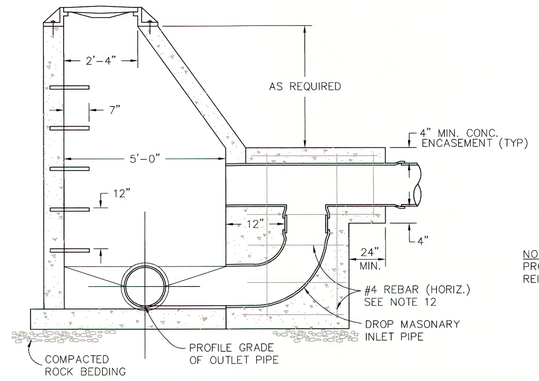

OUTSIDE DROP MANHOLE
SEE NOTES 1-12

NOTE:
PROVIDE 3" MIN. COVER FOR REINFORCING STEEL.

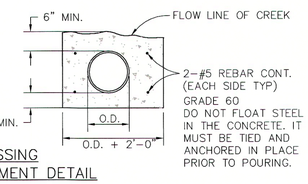

CREEK CROSSING
CONCRETE ENCASEMENT DETAIL

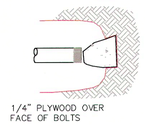

PLUG OR CAP

FITTING SIZE	TEE, WYE PLUG OR CROSS	90° BEND PLUGGED CROSS	TEE PLUGGED ON RUN A1	TEE PLUGGED ON RUN A2	45° BEND	22.5° BEND	11.25° BEND
2	0.2	0.4	0.6	0.4	0.2	--	--
3	0.5	0.8	1.2	0.8	0.5	0.2	--
4	1.0	1.4	1.9	1.4	1.0	0.4	0.2
6	2.1	3.0	4.3	3.0	1.6	1.0	0.5

NOTE: ABOVE BEARING AREAS BASED ON TEST PRESSURE OF 150 psi AND AN ALLOWABLE SOIL BEARING STRESS OF 2,000 lbs. PER SQUARE FOOT. TO COMPUTE BEARING AREAS FOR DIFFERENT TEST PRESSURES AND SOIL BEARING STRESSES, USE THE FOLLOWING EQUATION: BEARING AREA = (TEST PRESSURE /150) x (2000/SOIL BEARING STRESS) x (TABLE VALUE)

NOTE
1. CONCRETE THRUST BLOCKING TO BE POURED AGAINST UNDISTURBED EARTH (KEYED IN).
2. KEEP CONCRETE CLEAR OF JOINT AND ACCESSORIES.

STANDARD THRUST BLOCKING

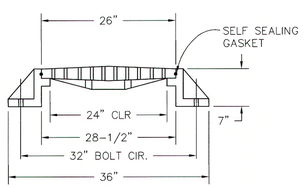

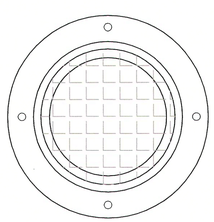

NOTE:
TYPICAL MANHOLE FRAMES AND COVERS SHALL BE HEAVY DUTY, MODEL R1642 WITH SELF SEALING GASKET AS MFR'D. BY NEENAH FOUNDRY COMPANY OR APPROVED EQUAL.

TYPICAL BOLT DOWN MANHOLE FRAME AND COVER

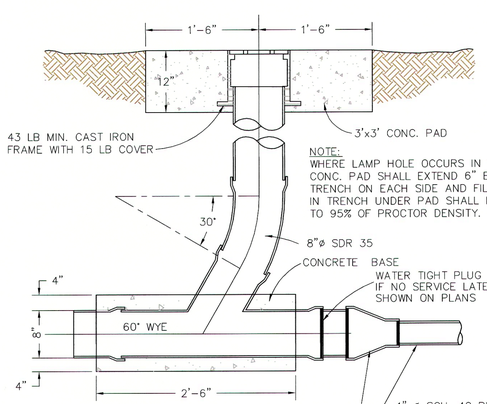

NOTE:
WHERE LAMP HOLE OCCURS IN TRAFFICWAYS CONC. PAD SHALL EXTEND 6" BEYOND TRENCH ON EACH SIDE AND FILL MATERIAL IN TRENCH UNDER PAD SHALL BE COMPACTED TO 95% OF PROCTOR DENSITY.

TYPICAL LAMP HOLE

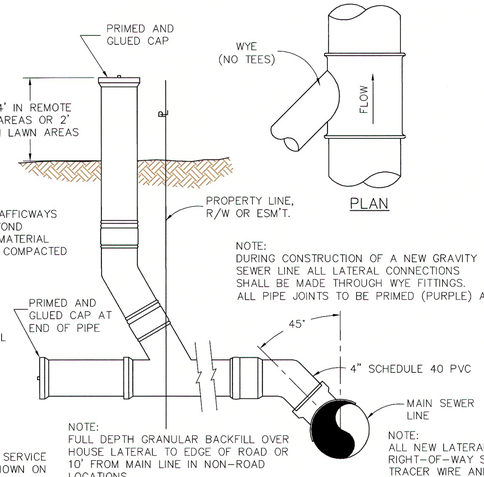

NOTE:
FULL DEPTH GRANULAR BACKFILL OVER HOUSE LATERAL TO EDGE OF ROAD OR 10' FROM MAIN LINE IN NON-ROAD LOCATIONS.

PROFILE

PLAN

NOTE:
DURING CONSTRUCTION OF A NEW GRAVITY SEWER LINE ALL LATERAL CONNECTIONS SHALL BE MADE THROUGH WYE FITTINGS. ALL PIPE JOINTS TO BE PRIMED (PURPLE) AND GLUED

NOTE:
ALL NEW LATERALS IN PUBLIC RIGHT-OF-WAY SHALL BE MARKED WITH TRACER WIRE AND AN ACCESS POINT WITHIN A PROTECTIVE ENCLOSURE. PROTECTIVE ENCLOSURES AND CLEANOUTS SHALL BE EXTENDED TO GRADE AND INSTALLED SO THAT IT IS EASILY ACCESSIBLE.

4" SERVICE LATERAL AND CLEANOUT CONNECTION

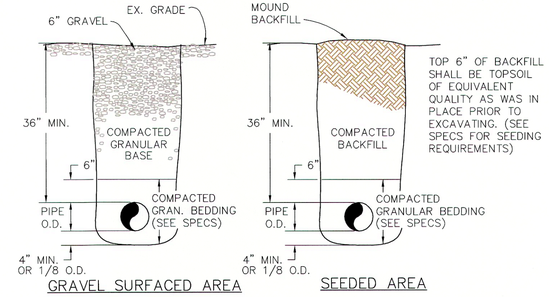

GRAVEL SURFACED AREA

SEEDED AREA

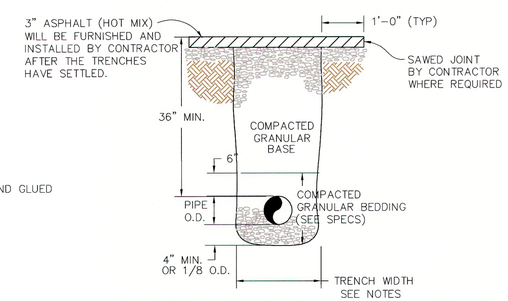

BITUMINOUS SURFACED AREA

TRENCHING BACKFILL METHODS

NOTES:

1. PIPE INVERTS AT ELEVATIONS HIGHER THAN THE OUTLET PIPE INVERT SHALL BE FILLETED TO A UNIFORM SLOPE TO FACILATATE SMOOTH AND UNINTERRUPTED FLOW.
2. PIPES ENTERING AT AN ANGLE TO THE OUTLET PIPE SHALL BE CURVED INTO THE OUTLET CHANNEL TO MINIMIZE TURBULENCE IN THE MANHOLE.
3. DROP MANHOLES ARE TO BE INSTALLED WHERE THE DIFFERENCE IN ELEVATION OF INCOMING AND OUTGOING SEWER INVERTS IS 2' OR GREATER.
4. MANHOLES AND DROP MANHOLES 4' DEEP OR MORE SHALL HAVE STEPS INSTALLED.
5. MANHOLE WALL AND BOTTOMS SHALL HAVE A MINIMUM NO. 2 REBAR SPACED ON 12" CENTERS HORIZONTALLY. VERTICAL REBAR SHALL BE NO. 2 AND NO. 3 ALTERNATING ON 12" CENTERS FOR THE LOWER 1/2 OF THE DEPTH AND NO. 2 ON 12" CENTERS OF THE TOP 1/2 OF THE DEPTH. THIS REBAR APPLIES TO CAST IN PLACE CONSTRUCTION.
6. MANHOLE WALL THICKNESS SHALL BE A MINIMUM OF 5" FOR PRECAST AND 6" FOR CAST IN PLACE.
7. WHERE MANHOLES ARE CONSTRUCTED IN AREAS OUTSIDE OF STREETS, THE TOP OF THE MANHOLE IS TO EXTEND 6" ABOVE EXISTING GRADE WITH THE FINAL GROUND SLOPED AWAY TO PREVENT WATER FROM PONDING OVER THE COVER.
8. MANHOLE FRAMES AND COVERS FOR MANHOLES SHALL HAVE SELF SEALING GASKETS AND SHALL MEET THE REQUIREMENTS GIVEN FOR A TYPICAL FRAME AND COVER. WHERE SPECIFIED OR INDICATED, BOLT DOWN FRAMES AND COVERS SHALL BE USED.
9. ALL MANHOLE STEPS SHALL BE 1/2" REINFORCING BAR GRADE 60 COPOLYMER POLYPROPLENE PLASTIC COATED. MINIMUM SIZE SHALL BE 5" DEEP (EXPOSED) x 10" WIDTH AND SHALL MEET REQUIREMENTS OF ASTM D-2146-D TYPE II.
10. MANHOLE CHANNEL HEIGHT SHALL BE 1/2 OF THE PIPE I.D., AND "U" SHAPED BENCHES TO BE 12" WIDE MINIMUM.
11. IF LINE OF ACTUAL EXCAVATION EXTENDS BEYOND LINE OF DROP MASONARY, FILL EXCESS EXCAVATED SPACE WITH CONSTRUCTION MATERIAL OF DROP MASONARY OR FILL WITH LOWSLUMP CONCRETE TO BASE OF ENCASEMENT.
12. IF EXCAVATED SPACE OUTSIDE OF DROP MASONRY INLET PIPE EXCEEDS ONE FOOT. REINFORCE SEWER PIPE ENCASEMENT WITH A MINIMUM OF 5 NO. 4 HORIZONTAL REBAR AT 12" O.C. VERTICALLY, TWO EACH SIDE OF DROP PIPE GROUTED INTO 2" DIAMETER HOLES IN MANHOLE WALL.
13. TRENCH WIDTH SHALL BE MAINTAINED TO 12" ABOVE TOP OF PIPE.
14. TRENCH MAY SLOPE BACK FROM 12" ABOVE PIPE TO GROUND SURFACE.
15. WHERE ROCK EXCAVATION OCCURS, TRENCH WIDTH SHALL BE MAINTAINED FROM TOP OF ROCK OR 12" MINIMUM ABOVE PIPE TO TRENCH BOTTOM. 6" BEDDING IS REQUIRED UNDER AND AROUND PIPE IN ROCK EXCAVATION.
16. MANHOLES PLACED IN ASPHALT OR CONCRETE LOCATION SHALL BE SET FLUSH WITH THE DRIVING SURFACE. THIS MAY REQUIRE FRAME BEING SET OUT OF LEVEL TO ACCOMMODATE SLOPE OF SURFACE. MANHOLE LID ELEVATION MAY NEED TO VARY FROM PLAN ELEVATION TO ACCOMMODATE THIS. THIS SHALL BE PART OF SETTING FRAME AND THE CONTRACTOR SHALL NOT RECEIVE AN EXTRA PAYMENT.
17. GRANULAR BEDDING SHALL MEET THE FOLLOWING GRADATION REQUIREMENTS: 100% PASSING A 1 INCH SEIVE, 95% PASSING A 3/4" SEIVE (MINIMUM), AND 5% PASSING (MAXIMUM) ON A NO. 4 SEIVE.
18. TRENCH WIDTH FOR SEWER LINES SHALL BE AS FOLLOWS:

SEWER SIZE	MIN. TRENCH WIDTH
8"	24"
10"	24"
12"	30"
15"	30"
18"	36"
21"	42"
24"	48"

REVISIONS	BY

STATE OF MISSOURI
ROBERT J. SCHAFFER
NUMBER E-29444
2/15/19
REGISTERED PROFESSIONAL ENGINEER

PROJECT FOR:
EAST AVE. SANITARY SEWER REPLACEMENT
SULLIVAN, MISSOURI

MISCELLANEOUS SEWER DETAILS

SULLIVAN MISSOURI
"Values and Tradition – Vision and Progress"

210 W. WASHINGTON
SULLIVAN, MO. 63080
PH: 573-468-8965
FAX: 573-468-8964
www.sullivan.mo.us
sullivanmissouri
@CityofSullivan

DRAWN BY:	DG
CHECKED BY:	RS
DATE:	FEB. 11, 2019
SCALE:	N.T.S.
PROJECT No.	19005
FILE:	19005D1
SHEET	3 OF 3 SHEETS